BABCOCK-DAVIS

BXTA/BXTL SINGLE OUTSWING HVAC ACCESS DOOR (HVHZ) (IMPACT)

INSTALLATION NOTES:

1. ONE (1) INSTALLATION ANCHOR IS REQUIRED AT EACH ANCHOR LOCATION SHOWN UNLESS OTHERWISE NOTED.

2. THE NUMBER OF INSTALLATION ANCHORS DEPICTED IS THE MINIMUM NUMBER OF ANCHORS TO BE USED FOR PRODUCT INSTALLATION.

3. INSTALL INDIVIDUAL INSTALLATION ANCHORS WITHIN A TOLERANCE OF ±1/2 INCH OF THE DEPICTED LOCATION IN THE ANCHOR LAYOUT DETAIL (I.E., WITHOUT CONSIDERATION OF TOLERANCES). TOLERANCES ARE NOT CUMULATIVE FROM ONE INSTALLATION ANCHOR TO THE NEXT.

4. SHIM AS REQUIRED AT EACH INSTALLATION ANCHOR WITH LOAD BEARING SHIM(S). MAXIMUM ALLOWABLE SHIM STACK TO BE 3/8 INCH. SHIM WHERE SPACE OF 1/16 INCH OR GREATER OCCURS. SHIM(S) SHALL BE CONSTRUCTED OF HIGH DENSITY PLASTIC OR BETTER.

5. FOR INSTALLATION INTO WOOD FRAMING USE **#14 STAINLESS STEEL WOOD SCREWS** OF SUFFICIENT LENGTH TO ACHIEVE 1-1/2 INCH MINIMUM EMBEDMENT INTO WOOD SUBSTRATE.

6. FOR INSTALLATION THROUGH 1X BUCK TO CONCRETE/MASONRY, OR DIRECTLY INTO CONCRETE/MASONRY, USE **1/4 INCH DIAMETER ITW BUILDEX SCOTS TAPCONS** OF SUFFICIENT LENGTH TO ACHIEVE 1 INCH MINIMUM EMBEDMENT.

7. FOR INSTALLATION INTO STEEL OR ALUMINUM STUD FRAME USE **#14 ITW BUILDEX 304 STAINLESS STEEL TAPPERS** OF SUFFICIENT LENGTH TO ACHIEVE A MINIMUM 3 THREADS PENETRATION BEYOND STRUCTURE

8. FOR INSTALLATION ANCHORS THROUGH LOCK ONLY USE **#14 STAINLESS STEEL WOOD SCREWS, 1/4 INCH DIAMETER ITW BUILDEX SCOTS TAPCONS, OR #14 ITW BUILDEX 304 STAINLESS STEEL TAPPERS** ADHERING TO EMBEDMENT & EDGE DISTANCE REQUIREMENTS SHOW ON PAGES 3-4.

9. MINIMUM EMBEDMENT AND EDGE DISTANCE EXCLUDE WALL FINISHES, INCLUDING BUT NOT LIMITED TO STUCCO, FOAM, BRICK VENEER, AND SIDING.

10. INSTALLATION ANCHORS AND ASSOCIATED HARDWARE MUST BE MADE OF CORROSION RESISTANT MATERIAL OR HAVE A CORROSION RESISTANT COATING:

    - FASTENERS USED WITHIN 3,000 FEET OF A SALTWATER COASTLINE AND INSTALLED IN ENCLOSED SPACES SHALL BE GALVANIZED IN ACCORDANCE WITH SECTION 1711.1.1 (E.G., ASTM A153 CLASS D, ASTM A641 CLASS 3S, OR EQUIVALENT CORROSION RESISTANCE).

    - CONNECTORS AND METAL PLATES USED WITHIN 3,000 FEET OF A SALTWATER COASTLINE SHALL BE STANDARD GALVANIZED IN ACCORDANCE WITH SECTION 1711.1.2 (E.G., ASTM A653 G90, ASTM A123, OR PROTECTIVE COATING PER TPI 1).

11. INSTALLATION ANCHORS SHALL BE INSTALLED IN ACCORDANCE WITH ANCHOR MANUFACTURER'S INSTALLATION INSTRUCTIONS, AND ANCHORS SHALL NOT BE USED IN SUBSTRATES WITH STRENGTHS LESS THAN THE MINIMUM STRENGTH SPECIFIED BY THE ANCHOR MANUFACTURER.

12. INSTALLATION ANCHOR CAPACITIES FOR PRODUCTS HEREIN ARE BASED ON SUBSTRATE MATERIALS WITH THE FOLLOWING PROPERTIES:
    A. WOOD - MINIMUM SPECIFIC GRAVITY OF 0.55.
    B. CONCRETE - MINIMUM COMPRESSIVE STRENGTH OF 3000 PSI.
    C. MASONRY - STRENGTH CONFORMANCE TO ASTM C-90.
    D. STEEL - MINIMUM YIELD STRENGTH OF 33 KSI. MINIMUM WALL THICKNESS OF 18 MILS (26 GAUGE).
    E. ALUMINUM - MIN. 6063-T5. MINIMUM WALL THICKNESS OF 1/8".

GENERAL NOTES:

1. THE PRODUCT SHOWN HEREIN IS DESIGNED AND MANUFACTURED TO COMPLY WITH THE CURRENT FLORIDA BUILDING CODE (FBC), **INCLUDING** HVHZ AND HAS BEEN EVALUATED ACCORDING TO THE FOLLOWING:
    - TAS 201-94
    - TAS 202-94
    - TAS 203-94

2. ADEQUACY OF THE EXISTING STRUCTURAL CONCRETE/MASONRY AND 2X FRAMING AS A MAIN WIND FORCE RESISTING SYSTEM CAPABLE OF WITHSTANDING AND TRANSFERRING APPLIED PRODUCT LOADS TO THE FOUNDATION IS THE RESPONSIBILITY OF THE ENGINEER OR ARCHITECT OF RECORD FOR THE PROJECT OF INSTALLATION.

3. 1X AND 2X BUCKS (WHEN USED) SHALL BE DESIGNED AND ANCHORED TO PROPERLY TRANSFER ALL LOADS TO THE STRUCTURE. BUCK DESIGN AND INSTALLATION IS THE RESPONSIBILITY OF THE ENGINEER OR ARCHITECT OF RECORD FOR THE PROJECT OF INSTALLATION.

4. THE INSTALLATION DETAILS DESCRIBED HEREIN ARE GENERIC AND MAY NOT REFLECT ACTUAL CONDITIONS FOR A SPECIFIC SITE. IF SITE CONDITIONS CAUSE INSTALLATION TO DEVIATE FROM THE REQUIREMENTS DETAILED HEREIN, A LICENSED ENGINEER OR ARCHITECT SHALL PREPARE SITE SPECIFIC DOCUMENTS FOR USE WITH THIS DOCUMENT.

5. APPROVED IMPACT PROTECTIVE SYSTEM **IS NOT REQUIRED** ON THIS PRODUCT IN AREAS REQUIRING IMPACT RESISTANCE.

6. FRAME MATERIAL: ALUMINUM 6063-T5

7. DISSIMILAR METALS INCLUDING FASTENERS THAT MAY COME INTO CONTACT WITH ALUMINUM UNIT FRAMING SHALL BE PROTECTED AS DEFINED IN THE FBC.

8. ALL EXPOSED STEEL COMPONENTS ARE GALVANIZED AND SHOP PRIMED.

9. DOOR DOES NOT MEET EGRESS REQUIREMENTS. PRODUCT TO BE UTILIZED IN HVAC APPLICATIONS.

10. BXTA DOOR WILL INCLUDE A LOCK. BXTL WILL NOT INCLUDE ANY LOCKS.

TABLE OF CONTENTS

SHEET	SHEET DESCRIPTION
1	INSTALLATION & GENERAL NOTES
2	ELEVATION & ANCHOR LAYOUT
3	VERTICAL SECTIONS
4	HORIZONTAL SECTIONS
5	HINGE DETAILS
6	BILL OF MATERIALS

DESIGN PRESSURE RATING

LOCK TYPE	FRAME SIZE	DESIGN PRESSURE		MISSILE IMPACT RATING
LATCH OUTSWING	37.3125" X 49.3125"	+80.0 / -80.0 PSF	W/ WATER INFILTRATION	LARGE MISSILE IMPACT

babcockdavis

BABCOCK-DAVIS
9300 73RD AVENUE NORTH
BROOKLYN PARK, MN 54428
PH: (763) 447-2856

TITLE: BXTA/BXTL SINGLE OUTSWING HVAC ACCESS DOOR (HVHZ) (IMPACT)

INSTALLATION & GENERAL NOTES

PREPARED BY:
BUILDING DROPS, INC.
1900 NE. MIAMI COURT, SUITE 2-15
MIAMI, FL 33132
PH: (954)399-8478
FAX: (954)744.4738
WEB: www.buildingdrops.com

REMARKS	BY	DATE
2026 FBC UPDATE	LS	06/26

THE INSTALLATION DETAILS DESCRIBED HEREIN ARE GENERIC AND MAY NOT REFLECT ACTUAL CONDITIONS FOR A SPECIFIC SITE. IF SITE CONDITIONS CAUSE INSTALLATION TO DEVIATE FROM THE REQUIREMENTS DETAILED HEREIN, A LICENSED ENGINEER OR ARCHITECT SHALL PREPARE SITE SPECIFIC DOCUMENTS FOR USE WITH THIS DOCUMENT.

Digitally signed by Hermes F. Norero, P.E.
Reason: I am approving this document
Date: 2026.09.18 12:06:20 -04'00'

HERMES F. NORERO
LICENSE
No. 73778
STATE OF
FLORIDA
PROFESSIONAL ENGINEER

HERMES F. NORERO, PE
FLORIDA PE No. 73778
BUILDING DROPS, INC
1900 NE. MIAMI COURT, SUITE 2-15
MIAMI, FL 33132
FBPE CERT. OF AUTHORIZATION No. 29578

FL #: FL22309

DATE: 01.02.24

DWG. BY: DI

CHK. BY: HFN

SCALE: NTS

DWG. #: AJM004

SHEET: 1 OF 6

REV. A

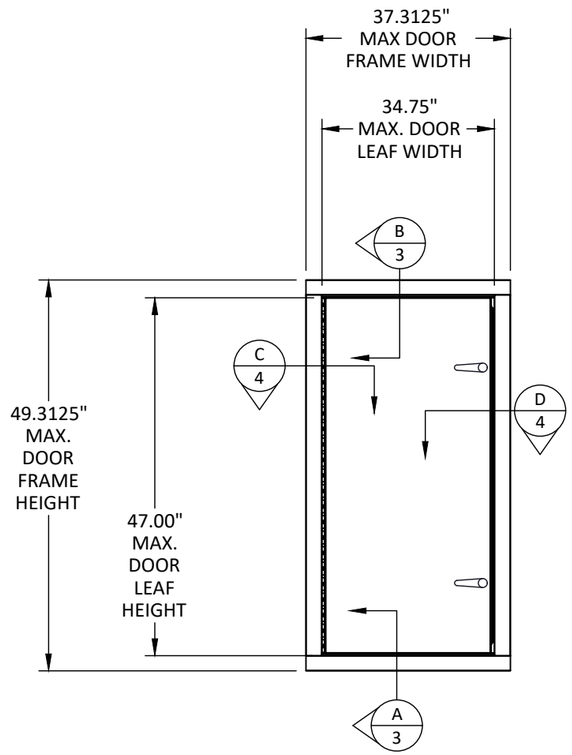

ELEVATION

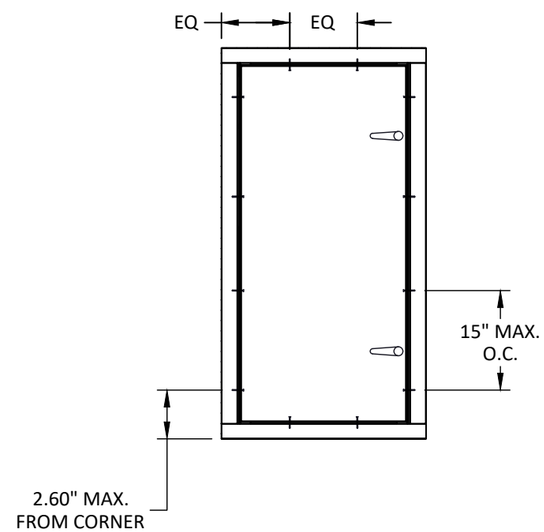

ANCHOR LAYOUT

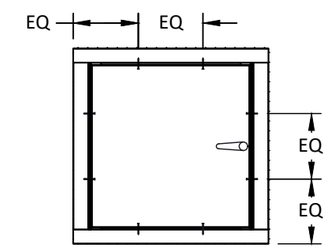

ANCHOR LAYOUT

NOTE:
1) CLEAR OPENING: FRAME HEIGHT - 2.25"
2) CLEAR OPENING: FRAME WIDTH - 3.75"

NUMBER OF LATCHES

STANDARD DOOR SIZES LISTED

		NOMINAL WIDTH				
		12.00"	18.00"	22.00"	24.00"	36.00"
NOMINAL HEIGHT	12.00"	(1)	(1)	(1)	(1)	(1)
	18.00"	(1)	(1)	(1)	(1)	(1)
	24.00"	(1)	(1)	(1)	(1)	(1)
	30.00"	(2)	(2)	(2)	(2)	(2)
	36.00"	(2)	(2)	(2)	(2)	(2)
	48.00"	(2)	(2)	(2)	(2)	(2)

babcockdavis

BABCOCK-DAVIS
9300 73RD AVENUE NORTH
BROOKLYN PARK, MN 54428
PH: (763) 447-2856

TITLE: BXTA/BXTL SINGLE OUTSWING HVAC ACCESS DOOR (HVHZ) (IMPACT)

ELEVATION & ANCHOR LAYOUT

PREPARED BY:
BUILDING DROPS, INC.
1900 NE. MIAMI COURT, SUITE 2-15
MIAMI, FL 33132
PH: (954)399-8478
FAX: (954)744.4738
WEB: www.buildingdrops.com

REMARKS	BY	DATE
2026 FBC UPDATE	LS	06/26

THE INSTALLATION DETAILS DESCRIBED HEREIN ARE GENERIC AND MAY NOT REFLECT ACTUAL CONDITIONS FOR A SPECIFIC SITE. IF SITE CONDITIONS CAUSE INSTALLATION TO DEVIATE FROM THE REQUIREMENTS DETAILED HEREIN, A LICENSED ENGINEER OR ARCHITECT SHALL PREPARE SITE SPECIFIC DOCUMENTS FOR USE WITH THIS DOCUMENT.

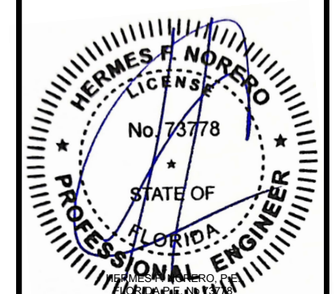

HERMES F. NORERO, PE
FLORIDA PE No. 73778
BUILDING DROPS, INC
1900 NE. MIAMI COURT, SUITE 2-15
MIAMI, FL 33132
FBPE CERT. OF AUTHORIZATION No. 29578

FL #: FL22309

DATE: 01.02.24

DWG. BY: DI

CHK. BY: HFN

SCALE: NTS

DWG. #: AJM004

SHEET: 2 OF 6

REV. A

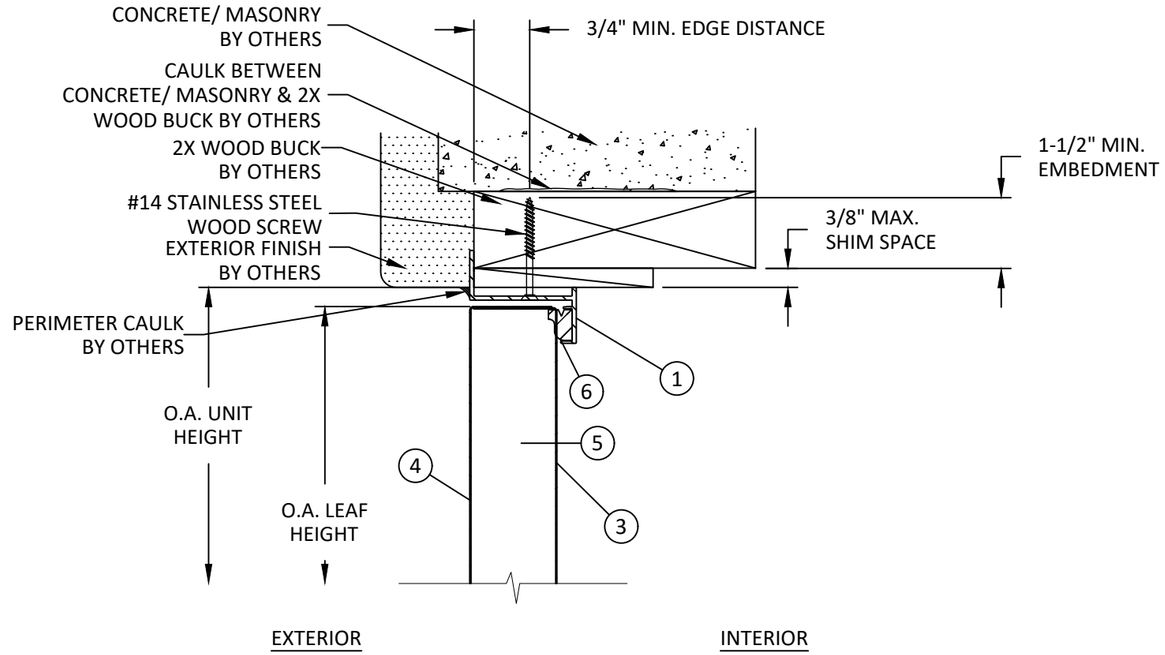

B/3 VERTICAL SECTION

HEAD
2X WOOD BUCK

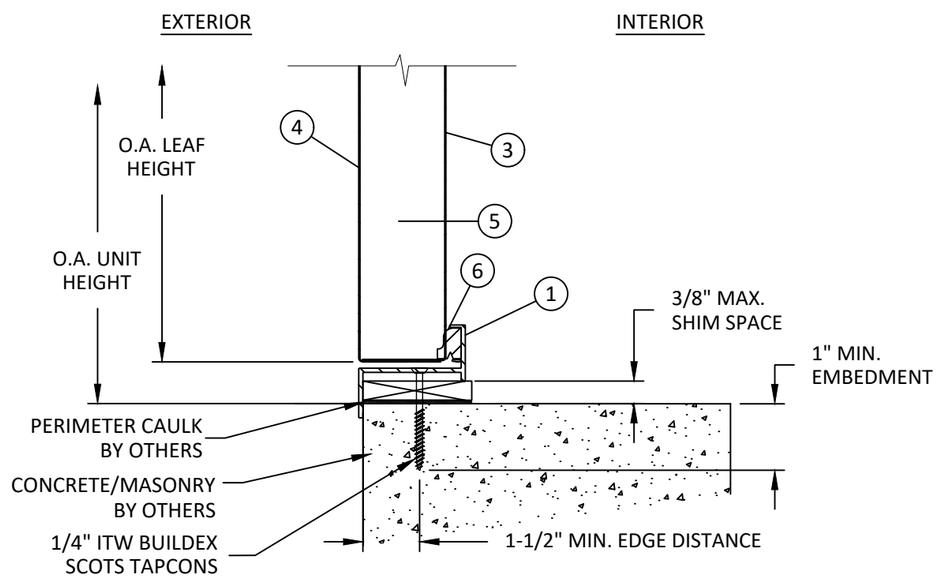

A/3 VERTICAL SECTION

SILL
CONCRETE

babcockdavis

BABCOCK-DAVIS
9300 73RD AVENUE NORTH
BROOKLYN PARK, MN 54428
PH: (763) 447-2856

TITLE: BXTA/BXTL SINGLE OUTSWING HVAC ACCESS DOOR (HVHZ) (IMPACT)

VERTICAL SECTIONS

PREPARED BY:
BUILDING DROPS, INC.
1900 NE. MIAMI COURT, SUITE 2-15
MIAMI, FL 33132
PH: (954)399-8478
FAX: (954)744.4738
WEB: www.buildingdrops.com

REMARKS	BY	DATE
2026 FBC UPDATE	LS	06/26

THE INSTALLATION DETAILS DESCRIBED HEREIN ARE GENERIC AND MAY NOT REFLECT ACTUAL CONDITIONS FOR A SPECIFIC SITE. IF SITE CONDITIONS CAUSE INSTALLATION TO DEVIATE FROM THE REQUIREMENTS DETAILED HEREIN, A LICENSED ENGINEER OR ARCHITECT SHALL PREPARE SITE SPECIFIC DOCUMENTS FOR USE WITH THIS DOCUMENT.

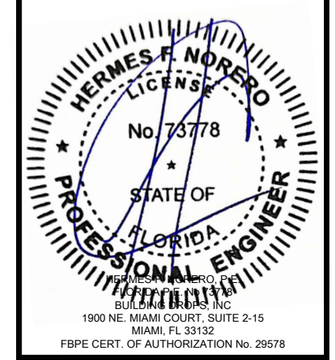

FL #: FL22309

DATE: 01.02.24

DWG. BY: DI | CHK. BY: HFN

SCALE: NTS

DWG. #: AJM004

SHEET: 3 OF 6 | REV. A

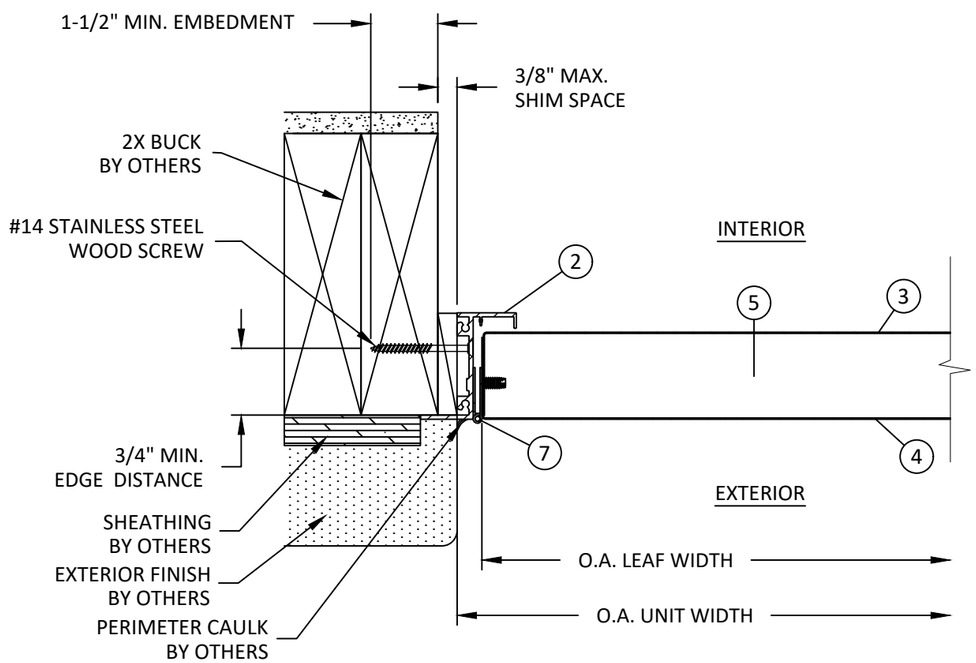

C/4 **HORIZONTAL SECTION**

JAMB
MASONRY, TYP.

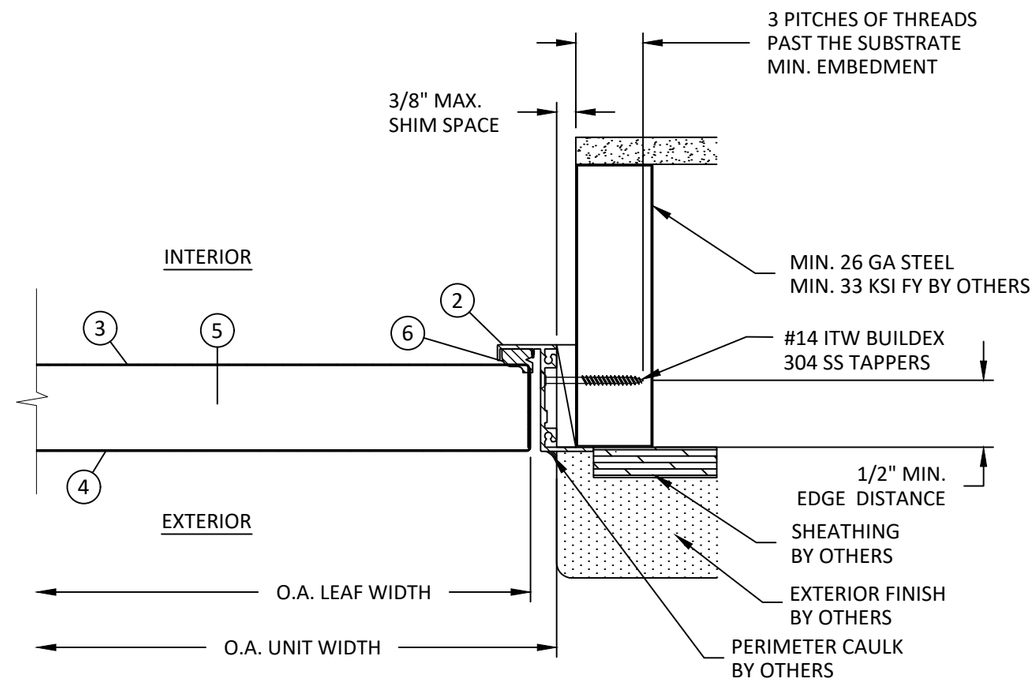

D/4 **HORIZONTAL SECTION**

JAMB
22 GA. STEEL, TYP.

babcockdavis

BABCOCK-DAVIS
9300 73RD AVENUE NORTH
BROOKLYN PARK, MN 54428
PH: (763) 447-2856

TITLE: BXTA/BXTL SINGLE OUTSWING HVAC ACCESS DOOR (HVHZ) (IMPACT)

HORIZONTAL SECTIONS

PREPARED BY:
BUILDING DROPS, INC.
1900 NE. MIAMI COURT, SUITE 2-15
MIAMI, FL 33132
PH: (954)399-8478
FAX: (954)744.4738
WEB: www.buildingdrops.com
BUILDING DROPS

REMARKS	BY	DATE
2026 FBC UPDATE	LS	06/26

THE INSTALLATION DETAILS DESCRIBED HEREIN ARE GENERIC AND MAY NOT REFLECT ACTUAL CONDITIONS FOR A SPECIFIC SITE. IF SITE CONDITIONS CAUSE INSTALLATION TO DEVIATE FROM THE REQUIREMENTS DETAILED HEREIN, A LICENSED ENGINEER OR ARCHITECT SHALL PREPARE SITE SPECIFIC DOCUMENTS FOR USE WITH THIS DOCUMENT.

HERMES F. NORERO
LICENSE
No. 73778
STATE OF
FLORIDA
PROFESSIONAL ENGINEER

HERMES F. NORERO, P.E.
FLORIDA P.E. LIC. No. 73778
BUILDING DROPS, INC
1900 NE. MIAMI COURT, SUITE 2-15
MIAMI, FL 33132
FBPE CERT. OF AUTHORIZATION No. 29578

FL #: FL22309

DATE: 01.02.24

DWG. BY: DI

CHK. BY: HFN

SCALE: NTS

DWG. #: AJM004

SHEET: 4

REV. A

DOOR SIZE (HEIGHT):	12.00"	18.00"	24.00"	30.00"	36.00"	48.00"
CUT LENGTH; L=	11.00"	17.00"	23.00"	29.00"	35.00"	47.00"
NUMBER OF FIVE HOLE PATTERNS:	1.00	1.50	2.00	2.50	3.00	4.00

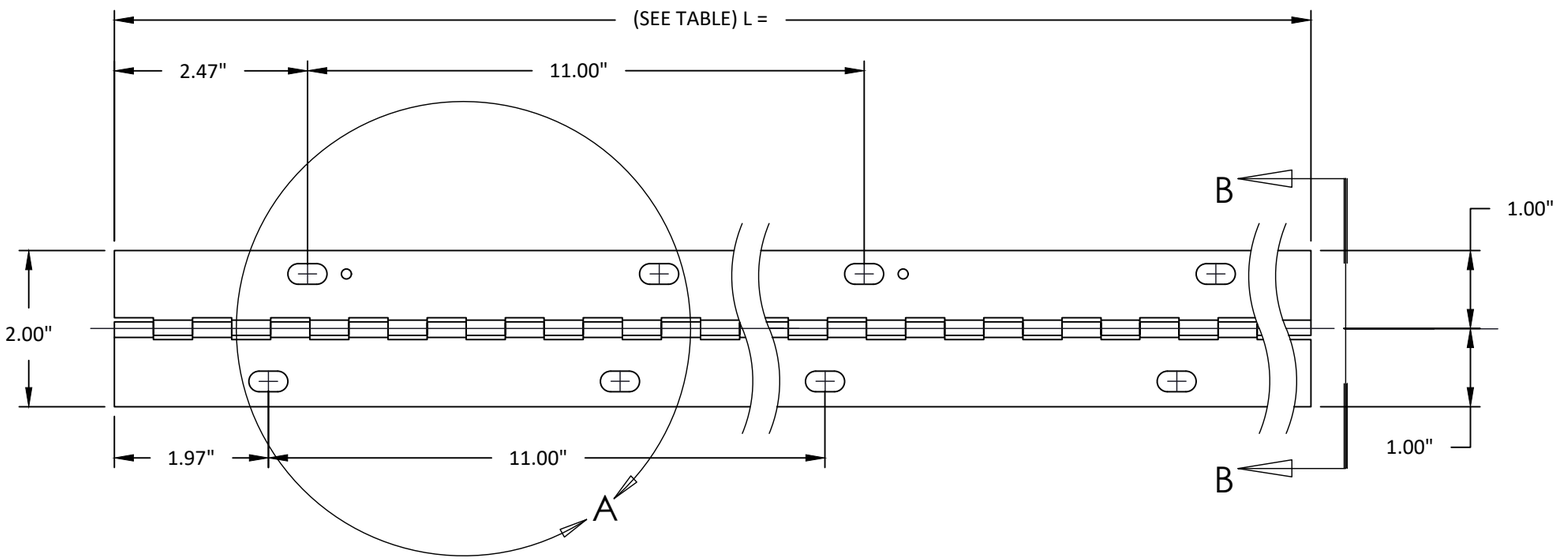

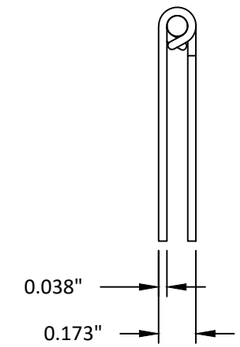

SECTION B-B
FOLDED

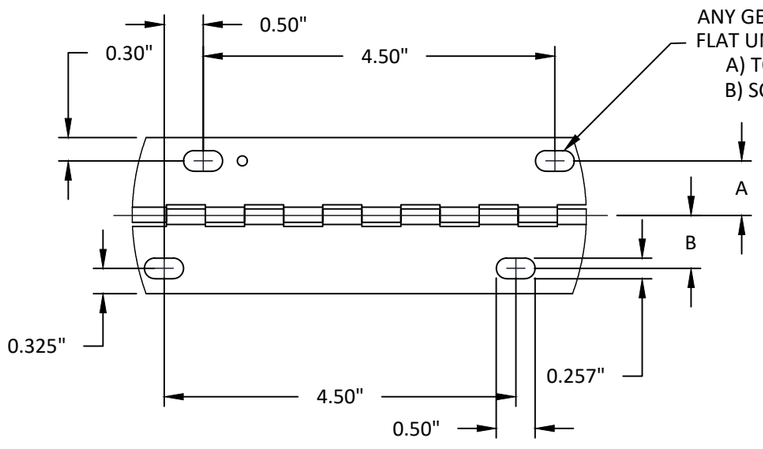

ANY GEOMETRY WHICH WILL YIELD THE FOLLOWING FOR A #12 MACHINE SCREW WITH A #10 FLAT UNDERCUT HEAD THAT COMPLIES WITH ANSI STANDARD B 18.6.4-1981:
A) TO NOT LET SCREW HEAD PROTRUDE BELOW UNDERSIDE OF MATERIAL WHEN TILTED 10°
B) SCREW HEAD PROTRUSION ALLOWANCE ABOVE TOP SIDE OF HINGE 0.042 - 0.057

DETAIL A
5 HOLE HINGE PATTERN

DIMENSION	VALUE	TOLERANCE
A	0.700"	±0.015"
B	0.675"	±0.015"
A-B		<0.025"

babcockdavis

BABCOCK-DAVIS
9300 73RD AVENUE NORTH
BROOKLYN PARK, MN 54428
PH: (763) 447-2856

TITLE: BXTA/BXTL SINGLE OUTSWING HVAC ACCESS DOOR (HVHZ) (IMPACT)

HINGE DETAILS

PREPARED BY:
BUILDING DROPS, INC.
1900 NE. MIAMI COURT, SUITE 2-15
MIAMI, FL 33132
PH: (954)399-8478
FAX: (954)744.4738
WEB: www.buildingdrops.com

REMARKS	BY	DATE
2026 FBC UPDATE	LS	06/26

THE INSTALLATION DETAILS DESCRIBED HEREIN ARE GENERIC AND MAY NOT REFLECT ACTUAL CONDITIONS FOR A SPECIFIC SITE. IF SITE CONDITIONS CAUSE INSTALLATION TO DEVIATE FROM THE REQUIREMENTS DETAILED HEREIN, A LICENSED ENGINEER OR ARCHITECT SHALL PREPARE SITE SPECIFIC DOCUMENTS FOR USE WITH THIS DOCUMENT.

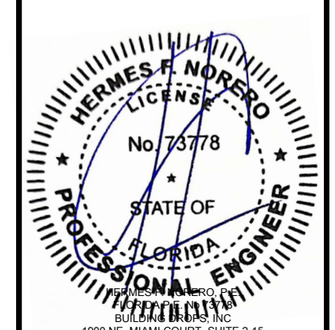

HERMES F. NORERO, PE
LICENSE No. 73778
BUILDING DROPS, INC
1900 NE. MIAMI COURT, SUITE 2-15
MIAMI, FL 33132
FBPE CERT. OF AUTHORIZATION No. 29578

FL #: FL22309

DATE: 01.02.24

DWG. BY: DI

CHK. BY: HFN

SCALE: NTS

DWG. #: AJM004

SHEET: 5 OF 6

REV. A

BILL OF MATERIALS

ITEM NO.	DESCRIPTION	MATERIAL	MANUFACTURER
1	EXTRUDED ALUMINUM FRAME HEAD AND SILL	6063-T5	BABCOCK-DAVIS
2	EXTRUDED ALUMINUM FRAME JAMBS	6063-T5	BABCOCK-DAVIS
3	24 GA GALVANIZED STEEL - INTERIOR FACE	A653 STEEL	BABCOCK-DAVIS
4	24 GA GALVANIZED STEEL - EXTERIOR FACE	A653 STEEL	BABCOCK-DAVIS
5	PRESSURE INJECTED POLYURETHANE FOAM	--	BABCOCK-DAVIS
6	COMPRESSION GASKET	EPDM	BABCOCK-DAVIS
7	0.038" X 2" CONTINUOUS PIANO-STYLE HINGE	304 SS	BABCOCK-DAVIS
8	COMPRESSION LATCH	STEEL	BAUER PRODUCTS, INC.

1 FRAME HEAD AND SILL
ALUMINUM 6063-T5

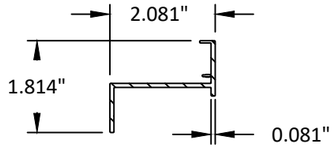

2 FRAME JAMB
ALUMINUM 6063-T5

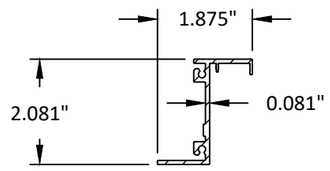

6 COMPRESSION GASKET
EPDM

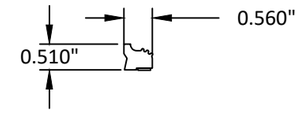

7 CONTINUOUS PIANO-STYLE HINGE
19 GA. 304 SS

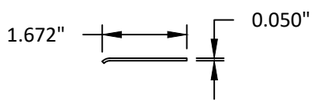

babcockdavis

BABCOCK-DAVIS
9300 73RD AVENUE NORTH
BROOKLYN PARK, MN 54428
PH: (763) 447-2856

TITLE: BXTA/BXTL SINGLE OUTSWING HVAC ACCESS DOOR (HVHZ) (IMPACT)

BILL OF MATERIAL

PREPARED BY:
BUILDING DROPS, INC.
1900 NE. MIAMI COURT, SUITE 2-15
MIAMI, FL 33132
PH: (954)399-8478
FAX: (954)744.4738
WEB: www.buildingdrops.com

REMARKS	BY	DATE
2026 FBC UPDATE	LS	06/26

THE INSTALLATION DETAILS DESCRIBED HEREIN ARE GENERIC AND MAY NOT REFLECT ACTUAL CONDITIONS FOR A SPECIFIC SITE. IF SITE CONDITIONS CAUSE INSTALLATION TO DEVIATE FROM THE REQUIREMENTS DETAILED HEREIN, A LICENSED ENGINEER OR ARCHITECT SHALL PREPARE SITE SPECIFIC DOCUMENTS FOR USE WITH THIS DOCUMENT.

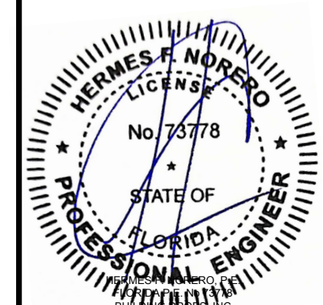

HERMES F. NORERO, P.E.
FLORIDA P.E. No. 73778
BUILDING DROPS, INC
1900 NE. MIAMI COURT, SUITE 2-15
MIAMI, FL 33132
FBPE CERT. OF AUTHORIZATION No. 29578

FL #: FL22309

DATE: 01.02.24

DWG. BY: DI

CHK. BY: HFN

SCALE: NTS

DWG. #: AJM004

SHEET: 6

REV. A

OF 6